# Gas turbine flowmeter MT100TB series

# Content


**1. General Information** ..... 2

**2. Technical Data** ..... 3

**3.** Specifications optional ..... 6

**4. Cautions for Installation** ..... 7

**5. Electrical Wiring** ..... 12

**6. Programming and Setup** ..... 17

**7. Troubleshooting** ..... 26

# 1. General Information

This manual will assist you in installing, using and maintaining your flow meter. It is your responsibility to make sure that all operators have access to adequate instructions about safe operating and maintenance procedure.

Warning

For your safety, review the major warnings and cautions below before operating your equipment.

1. Use only fluids that are compatible with the housing material and wetted components of your turbine.

2. When measuring flammable gases, observe precautions against fire or explosion.

3. When handling hazardous gases, always follow the liquid manufacturer's safety precautions.

4. When working in hazardous environments, always exercise appropriate safety precautions.

5. During turbine removal, gas may spill. Follow the gas manufacturer's safety precautions for clean up of minor spills.

6. Do not blow compressed air through the turbine.

7. Handle the rotor carefully. Even small scratches or nicks can affect accuracy.

8. When tightening the turbine, use a wrench only on the wrench flats.

9. For best results, calibrate the meter at least 1 time per year.

## 1.1 Product Description

Operating Principle:

Gas flows through the turbine housing causing an internal rotor to spin. As the rotor spins, an electrical signal is generated in the pickup coil. This signal is converted into engineering units (liters, cubic meters, gallons etc.) on the local display where is applicable. Optional accessory modules can be used to export the signal to other equipment.

Upon receipt, examine your meter for visible damage. The turbine is a precision measuring instrument and should be handled carefully. Remove the protective plugs and caps for a thorough inspection. If any items are damaged or missing, contact

Make sure the turbine flow model meets your specific needs. For your future reference, it might be useful to record this information on nameplate in the manual in case it becomes unreadable on the turbine. Refer to the nameplate for your customized product's specification.

# 2. Technical Data

## Measuring system

| | |
|---|---|
| Application range | Gas: Natural Gas, LPG, Air<br>(1) Dry gas without water<br>(2) Gas without corrosion |
| **Measured Value** | |
| Primary measured value | Flow Rate |
| Secondary measured value | Volume flow |
| Tertiary measured value | Temperature; Pressure<br>(ONLY available for compensation model) |

## Design

| **Features** | |
|---|---|
| Modular construction | The measurement system consists of a flow sensor and a signal converter. It is available as compact and as separate version. |
| Compact version converter | N Type: Pulse output without display |
| | A Type: 4-20mA Output without local display |
| | B Type: Local Display; Lithium Battery Power; No Output |
| | C Type: Local Display; 24V DC Power; 4-20mA Output;<br>Optional Function:<br>(1) Backup Power Supply: Lithium Battery<br>(2) Modbus RS485<br>(3) Pulse Output |
| | Compensation Type<br>D1: Local Display; 24V DC Power; Dual Power: Battery; 4-20mA Output (3-wire); SIRE RS485<br><br>D2: Local Display: 24V DC Power; Dual Power: Battery; 4-20mA Output (2-wire); Modbus RS485 |
| Connection | Thread: DN25-DN50 |
| | Flange: DN25-DN300 (DIN, ANSI, JIS) |
| Measurement Ratio | Standard – 10:1; Optional: 20:1 |

## Measuring accuracy

| | | |
|---|---|---|
| Reference conditions | Flow conditions similar to ISO 9951 | |
| | Medium: Gas | |
| | Temperature: +10...+30°C / +50...+86°F | |
| | Inlet section: ≥ 10 DN | |
| | Operating pressure: 1 bar / 14.5 psig | |
| Flow Meter Accuracy | Standard: 1.5% | Qmin to 0.2Qmax: 3%; 0.2Qmax to Qmax: 1.5% |
| | **Optional:** 1.0% | Qmin to 0.2Qmax: 2%; 0.2Qmax to Qmax: 1.0% |


ООО «Флюид-Лайн» официальный дистрибьютор A-Flow
+7(495) 984 4101, +7(495) 517 7261, +7(495) 517 0261, E-mail: mail@fluid-line.ru, www.fluid-line.ru
fluid-line

## Operating conditions

| | |
|---|---|
| **Temperature** | |
| Process temperature | -20...+80°C |
| Ambient temperature (all versions) | **Standard** (with aluminum converter housing): |
| | -10…+55°C |
| Storage temperature | -20...+70° |
| **Pressure** | |
| EN 1092-1 | DN25…DN300: PN 16 |
| | Other pressures on request |
| ASME B16.5 | 1”...12": 150 lb RF |
| | Other pressures on request |
| JIS | 1”...12": 10 K |
| | Other pressures on request |

## Installation conditions

| | |
|---|---|
| Installation | |
| | For detailed information see chapter "Cautions for Installation" |
| Flow direction | Forward |
| | Arrow on flow sensor indicates flow direction. |
| Inlet run | ≥ 10 DN |
| Outlet run | ≥ 5 DN |

## Materials

| | |
|---|---|
| **Sensor housing** | SS304 |
| | Other materials on request |
| **Flanges** | SS304 |
| | Other materials on request |
| **Rotor** | |
| | ABS Plastic (Acrylonitrile - Butadiene – Styrene) |
| | Aluminum Alloy |
| **Bearings and Shaft** | SS304 |
| **Converter Housing** | Standard: polyurethane coated die-cast aluminum |

## Process connections

| **Flange** | |
|---|---|
| EN 1092-1 | DN25...80 in PN 16...40<br>DN100...150 in PN16...25<br>DN200...300 in PN16 |
| ASME | 1”...3" in 150...300 lb RF<br>4”...12” in 150 lb RF |
| JIS | 1”...3” in 10...20K<br>4”...12” in 10K |
| Design of gasket surface | RF |
| | Other sizes or pressure ratings on request |
| **Thread** | DN25...DN50 in PN16 |

## Measurable Flow Rate Range:

*Note: The flow range as blow is based on operating status; REFERENCE ONLY. Consult the factory if you have special requirement. Refer to the nameplate or certificate for actual flow range.*

| **Nominal Diameter** | | **Standard Flow Range (SFR)** | | **Extended Flow Range (EFR)** | | **Standard Pressure Rating** |
|---|---|---|---|---|---|---|
| **(mm)** | **(in.)** | Code | (m3/h) | Code | (m3/h) | (MPa) |
| **25** | **1** | S | 2.5 to 25 | W | 4 to 40 | 1.6 |
| **40** | **1.5** | S | 5 to 50 | W | 6 to 60 | |
| **50** | **2** | S1 | 6 to 65 | W1 | 5 to 70 | |
| | | S2 | 10 to 100 | W2 | 8 to 100 | |
| **65** | **2.5** | S | 15 to 200 | W | 10 to 200 | |
| **80** | **3** | S1 | 15 to 300 | W | 10 to 160 | |
| | | S2 | 20 to 400 | | | |
| **100** | **4** | S1 | 20 to 400 | W | 13 to 250 | |
| | | S2 | 32 to 650 | | | |
| **125** | **5** | S | 25 to 700 | W | 20 to 800 | |
| **150** | **6** | S1 | 32 to 650 | W | 80 to 1600 | |
| | | S2 | 50 to 1000 | | | |
| **200** | **8** | S1 | 80 to 1600 | W | 50 to 1000 | |
| | | S2 | 130 to 2500 | | | |
| **250** | **10** | S1 | 130 to 2500 | W | 80 to 1600 | |
| | | S2 | 200 to 4000 | | | |
| **300** | **12** | S | 200 to 4000 | W1 | 130 to 2500 | |
| | | | | W2 | 320 to 6500 | |
| **400** | **16** | S | 400 to 8000 | W | 260 to 8000 | |


ООО «Флюид-Лайн» официальный дистрибьютор A-Flow
+7(495) 984 4101, +7(495) 517 7261, +7(495) 517 0261, E-mail: mail@fluid-line.ru, www.fluid-line.ru
fluid-line

## 3. Specifications optional

| Items | Description |
|---|---|
| | |
| **Converter** | No display; 24V DC; Pulse Output |
| | No display; 24V DC; 4-20mA Output (2-wire) |
| | Local display; Lithium Battery Power; No output |
| | Local display; 24V DC Power; 4-20mA Output: Optional (2-wire; 3-wire); Optional backup power: Lithium Battery Optional Communication: Modbus RS485 |
| | Local display; 24V DC and Battery Power; **3-wire** 4-20mA Output **RS485 Protocol** |
| | Local display; 24V DC and Battery Power; (1) Standard: **2-wire** 4-20mA Output (2) Optional: 3-wire 4-20mA Output **Modbus** RS485 Communication |
| **Diameter** | Three Digitals; for example: 025: 25 mm; 050: 50 mm; 125: 125 mm; 300: 300 mm |
| **Flow range** | Refer to flow range table |
| | Refer to flow range table |
| **Body Material** | SS304 |
| | Cast Aluminum |
| **Rotor Material** | ABS Plastic |
| | Aluminum Alloy |
| **Explosion Level** | Safety Field without Explosion |
| | ExiaIICT4 |
| | ExdIIBT6 |
| **Connection** | DXX: D06, D10, D16, D25, D40 D06: DIN PN6; D10: DIN PN10 D16: DIN PN16; D25: DIN PN25 D40: DIN PN40 |
| | ANSI 150#; ANSI 300# ANSI 600# |
| | |
| | Thread; DN4…DN50 |
| **Accuracy** | 1.5% |
| | 1.0% |

Model Code: MT100TB

# 4. Cautions for Installation

## 4.1 Mounting Positions

- Avoid all pipe locations where the flow is pulsating, such as in the outlet side of piston or diaphragm pumps.
- Avoid locations near equipment producing electrical interference such as electric motors, transformers, variable frequency, etc.
- Install the meter with enough room for future access for maintenance purposes.

Warning: Precaution for direct sunshine and rain when the meter is installed outside.

## 4.2 Required Lengths of Straight Runs

Flow altering device such as elbows, valves and reducers can affect accuracy. See diagram below for typical flow meter system installation.

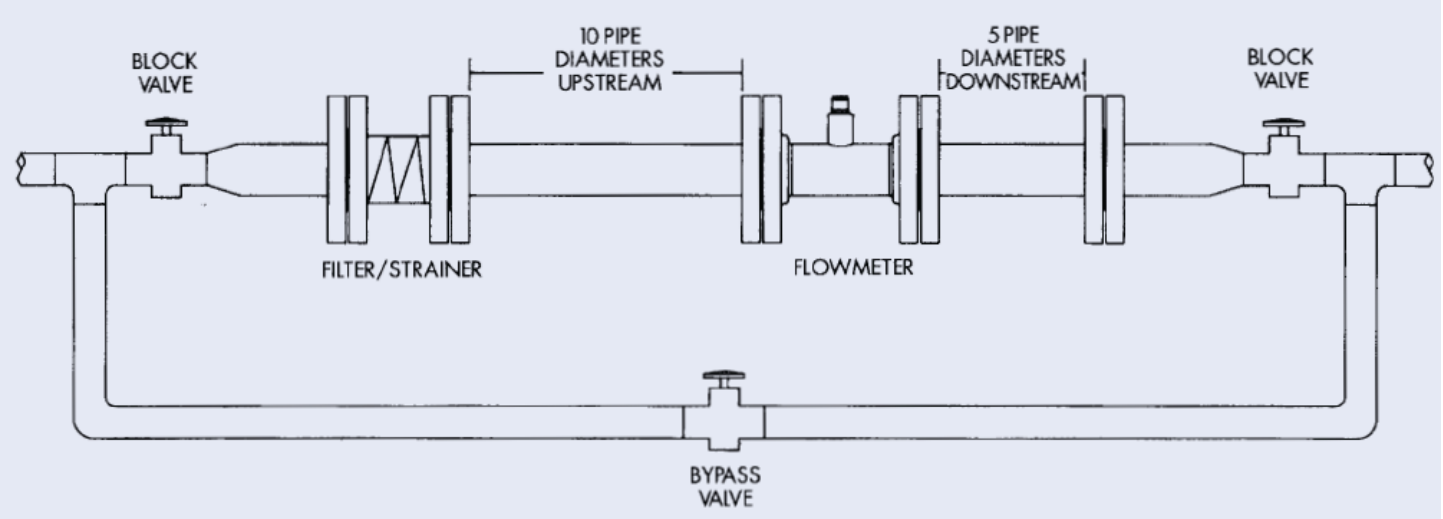


Diagram 1. Typical Flow Meter System Installation

The recommended guidelines are given to enhance accuracy and maximize performance.
Distance given here are minimum requirements; double them for desired straight pipe lengths.

- Upstream: allow a minimum straight pipe length at least 10 times the internal diameter of the pipe. For example, with the 50mm pipe, there should be 500mm of straight pipe immediately upstream. Desired upstream straight pipe length is 1000mm.
- Downstream: allow a minimum straight pipe length at least 5 times the internal diameter of the pipe. For example, with the 50mm pipe, there should be 250mm of straight pipe immediately upstream. Desired upstream straight pipe length is 500mm.


ООО «Флюид-Лайн» официальный дистрибьютор A-Flow
+7(495) 984 4101, +7(495) 517 7261, +7(495) 517 0261, E-mail: mail@fluid-line.ru, www.fluid-line.ru
fluid-line

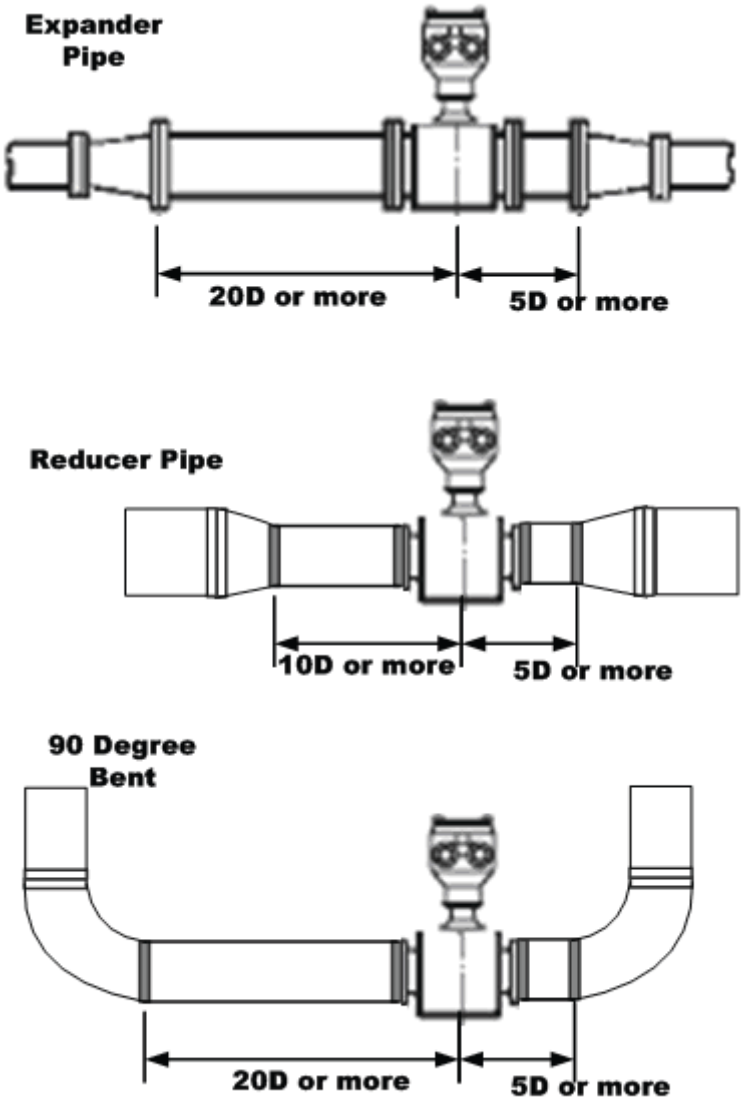


## *Special Notice*

- Foreign material in the liquid being measured can clog the meter's rotor and adversely affect accuracy. If this problem is anticipated or experienced, install screens to filter impurities from incoming liquids.

- To ensure accurate measurement, drain all air from the system before use.

- When the meter contains removable coverplates. Leave the coverplate installed unless accessory modules specify removal. Don't remove the coverplates when the meter is powered, or electrical shock and explosion hazard can be caused.

## 4.4 Connections

### 4.4.1 Thread Connection

*Note: Default Thread is Male G Thread, other thread are available on request. For example: Female NPT Thread, Male NPT Thread; Consult for more information*

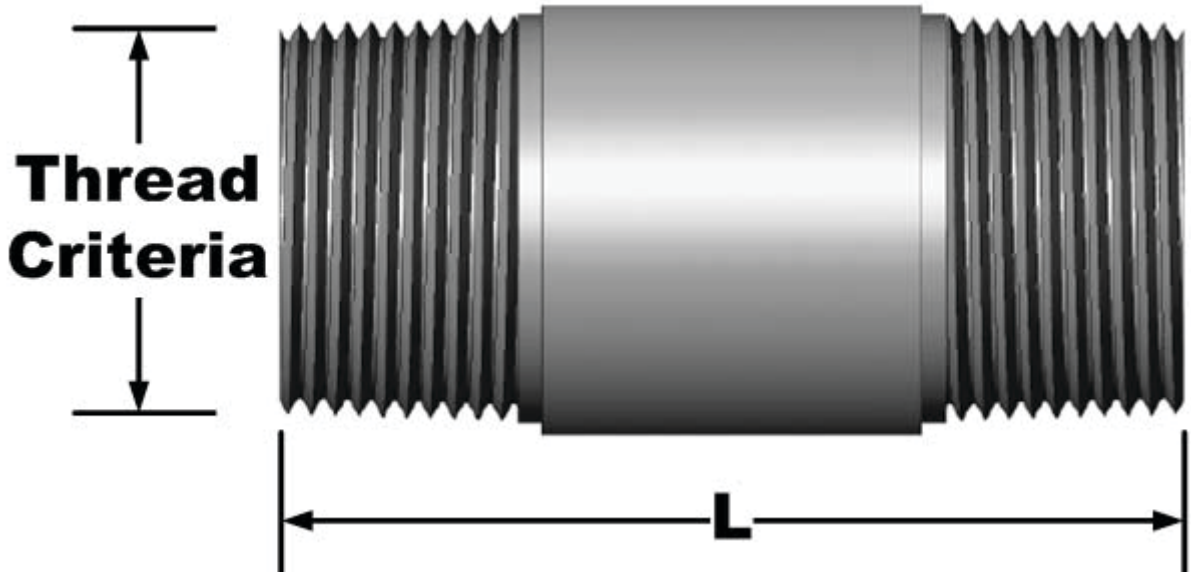


| Diameter (mm) | L (mm) | Thread Criteria | Model |
|---|---|---|---|
| 25 | 170 | G 2” | |
| 40 | 140 | G 2” | |
| | 200 | G 2” | |
| 50 | 150 | G 2-1/2” | |


ООО «Флюид-Лайн» официальный дистрибьютор A-Flow
+7(495) 984 4101, +7(495) 517 7261, +7(495) 517 0261, E-mail: mail@fluid-line.ru, www.fluid-line.ru
fluid-line

## 4.4.2 Flange Connection

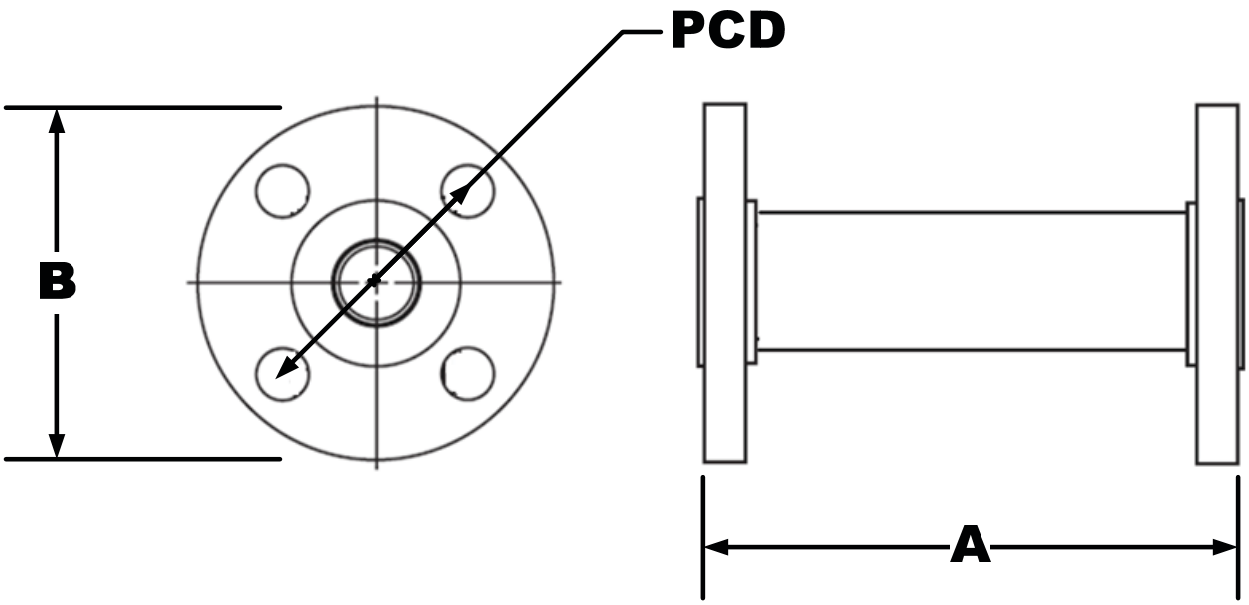


| ANSI Flange Meter Dimensions | | | | | | | |
|---|---|---|---|---|---|---|---|
| Size Code | | A | ANSI Flange Rating Class | Flange Diameter (B) | Bolt Hole Diameter | Bolt Circle Diameter (PCD) | Bolt Hole Quantity |
| (inch) | (mm) | (mm) | | (mm) | (mm) | (mm) | |
| 1" | 25 | 170 | 150 | 108 | 16 | 79 | 4 |
| | | | 300 | 124 | 19 | 89 | 4 |
| 1-1/2" | 40 | 200 | 150 | 127 | 16 | 99 | 4 |
| | | | 300 | 155 | 22 | 114 | 4 |
| 2" | 50 | 200 | 150 | 152 | 19 | 121 | 4 |
| | | | 300 | 165 | 19 | 127 | 8 |
| 2-1/2" | 65 | 240 | 150 | 180 | 19 | 140 | 4 |
| | | | 300 | 190 | 22 | 149 | 8 |
| 3" | 80 | 240 | 150 | 191 | 19 | 152 | 4 |
| | | | 300 | 210 | 22 | 168 | 8 |
| 4" | 100 | 300 | 150 | 229 | 19 | 191 | 8 |
| | | | 300 | 254 | 22 | 200 | 8 |
| 5" | 125 | 240 | 150 | 255 | 22 | 216 | 8 |
| | | | 300 | 280 | 22 | 235 | 8 |
| 6" | 150 | 450 | 150 | 279 | 22 | 241 | 8 |
| | | | 300 | 318 | 22 | 270 | 12 |
| 8" | 200 | 500 | 150 | 343 | 22 | 298 | 8 |
| | | | 300 | 381 | 25 | 330 | 12 |
| 10" | 250 | 500 | 150 | 460.4 | 25 | 362 | 12 |
| | | | 300 | 444.5 | 28.4 | 387.3 | 16 |
| 12" | 300 | 300 | 150 | 482.6 | 25.4 | 431.8 | 12 |
| | | | 300 | 520.7 | 31.8 | 450.9 | 16 |

| DIN Flange Meter Dimensions | | | | | | | |
|---|---|---|---|---|---|---|---|
| Size Code | | A | DIN Flange Pressure Rating | Flange Diameter (B) | Bolt Hole Diameter | Bolt Circle Diameter (PCD) | Bolt Hole Quantity |
| (inch) | (mm) | (mm) | MPa | (mm) | (mm) | (mm) | |
| 1" | 25 | 170 | 1.6 | 115 | 14 | 85 | 4 |
| 1-1/2" | 40 | 200 | 1.6 | 150 | 18 | 110 | 4 |
| 2" | 50 | 200 | 1.6 | 165 | 18 | 125 | 4 |
| 2-1/2" | 65 | 240 | 1.6 | 185 | 18 | 145 | 4 |
| 3" | 80 | 240 | 1.6 | 200 | 18 | 160 | 8 |
| 4" | 100 | 300 | 1.6 | 220 | 18 | 180 | 8 |
| 5" | 125 | 240 | 1.6 | 250 | 18 | 210 | 8 |
| 6" | 150 | 450 | 1.6 | 285 | 22 | 240 | 8 |
| 8" | 200 | 500 | 1.6 | 340 | 22 | 295 | 12 |
| 10" | 250 | 500 | 1.6 | 405 | 26 | 355 | 12 |
| 12" | 300 | 300 | 1.6 | 460 | 26 | 410 | 12 |


ООО «Флюид-Лайн» официальный дистрибьютор A-Flow
+7(495) 984 4101, +7(495) 517 7261, +7(495) 517 0261, E-mail: mail@fluid-line.ru, www.fluid-line.ru

# 5. Electrical Wiring

Warning: Electrical Hazard
Disconnect power before beginning wiring.

## 5.1 N; Pulse Output, explosion proof model.

Terminal Configuration

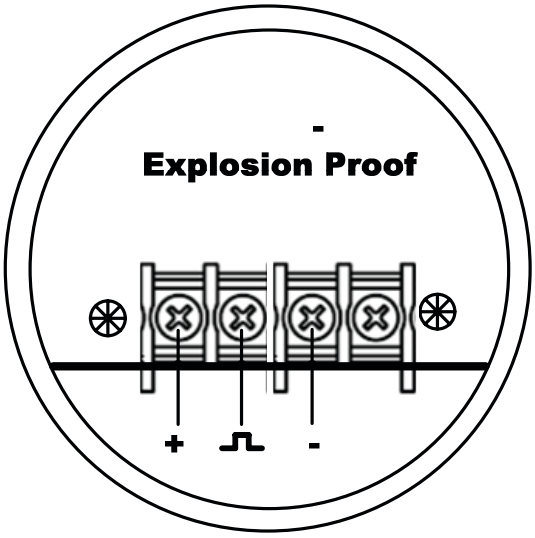


Terminal Wiring

| Terminal Symbols | Description |
|---|---|
| + | Power Supply: “24V+” |
| - | GND |
| ⎍ | Pulse Output |

## 5.2 A; 2-wire 4-20mA Output, No Local Display.

Terminal Configuration

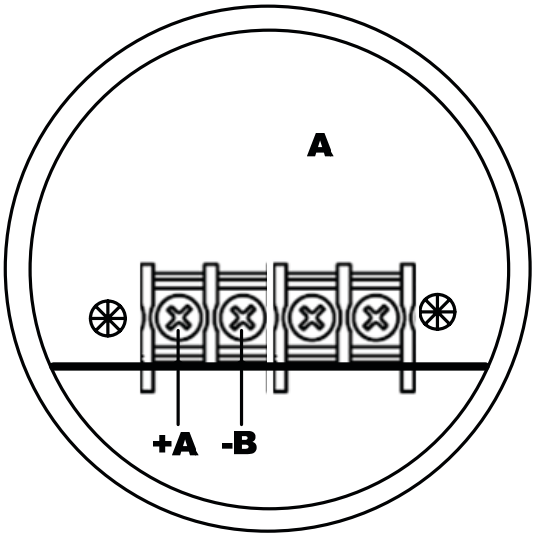


Terminal Wiring

| Terminal Symbols | Description |
|---|---|
| +A | Power Supply: “24V+” |
| -B | Current Output |

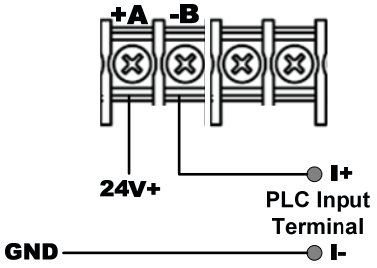

## 5.3 Local Display

*Note: Terminal configuration is same for C, but some functions are ONLY available on specified model. The table lists the function of each model.*

| Function List for converter with local display | | | | | | |
|---|---|---|---|---|---|---|
| Model | Primary Power Supply | **Optional** Dual Power Supply | Output | **Optional** Dual Output | Communication | Note |
| | Lithium Battery | Not Available | Not Available | Not Available | Not Available | |
| | 24V DC | Lithium Battery | 4-20mA | Pulse | Not Available | Output is only available when 24V Power supply is on. |

Terminal Configuration

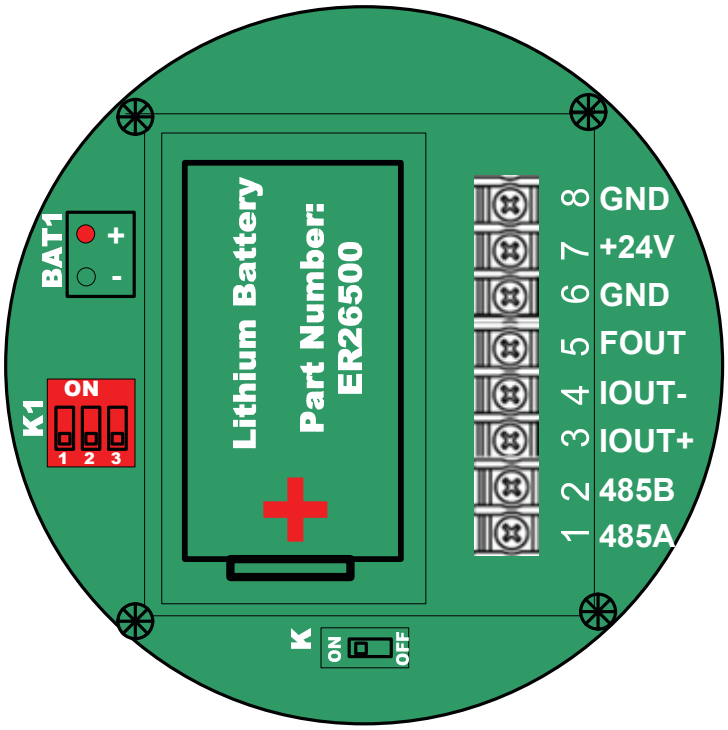


| DIP Switch: K1 | | | |
|---|---|---|---|
| **Function** | **1** | **2** | **3** |
| Original Pulse Output | **ON** | OFF | OFF |
| Scaled Pulse Output: 1 m3 / Pulse | OFF | **ON** | OFF |
| Scaled Pulse Output: 1L/Pulse; 10L/Pulse; 100L/Pulse Configure it in parameter setting | OFF | OFF | **ON** |

Terminal Wiring

5.3.1 B: if the display is blank, put the plug of battery into the battery socket (BAT1).


ООО «Флюид-Лайн» официальный дистрибьютор A-Flow
+7(495) 984 4101, +7(495) 517 7261, +7(495) 517 0261, E-mail: mail@fluid-line.ru, www.fluid-line.ru
fluid-line

5.3.2

*Note: Standard C configured with (2-wire) 4-20mA Output unless particular declare.*

| Model | Function (Optional) | Terminal Code | Terminal Symbols | Description |
|---|---|---|---|---|
| | (2-wire) 4-20mA Output | 3 | IOUT+ | 24V DC+ |
| | | 4 | IOUT- | GND |
| | (3-wire) 4-20mA Output | 7 | +24V | 24V+ DC Power Supply |
| | | 8 | GND | GND |
| | | 3 | IOUT+ | Current Output 4-20mA DC (+) |
| | (4-wire) 4-20mA Output | 7 | +24V | 24V+ DC Power Supply |
| | | 8 | GND | GND |
| | | 3 | IOUT+ | Current Output (+) Iout+ |
| | | 6 | GND | Current Output (-) Iout- |

**Electrical Wiring Diagram**

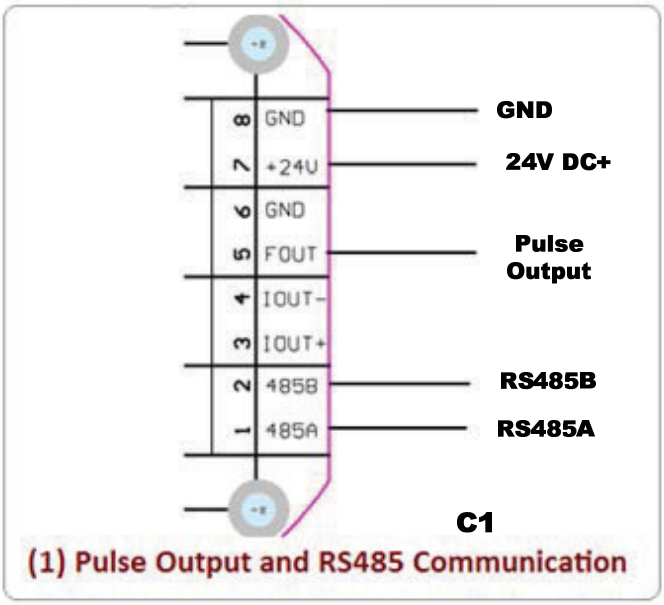

(1) Pulse Output and RS485 Communication

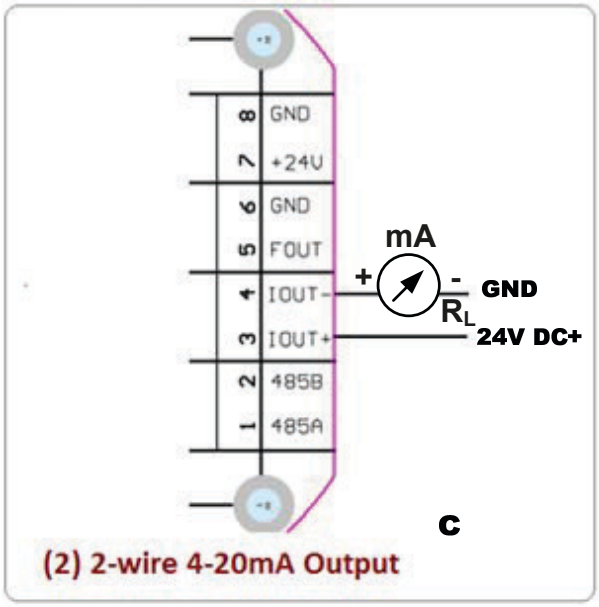

(2) 2-wire 4-20mA Output

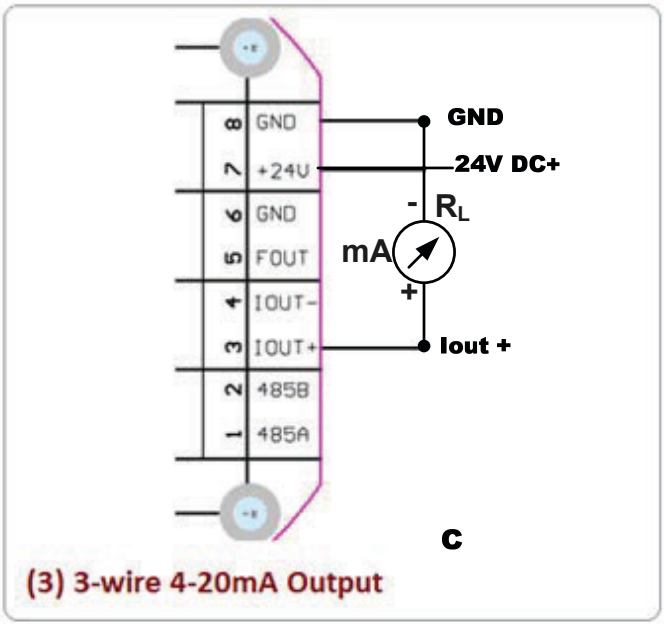

(3) 3-wire 4-20mA Output

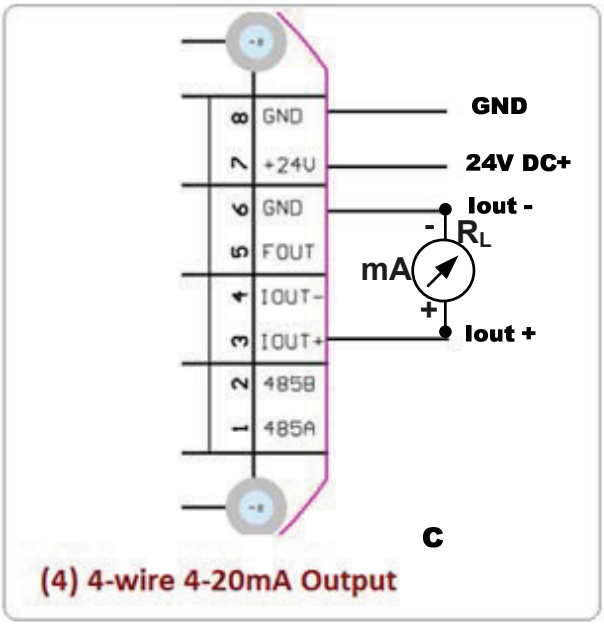

(4) 4-wire 4-20mA Output

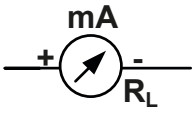


mA meter

0...20 mA or 4...20mA and other

$R_L$ is the internal resistance of the measuring point including the cable resistance

## 5.4 Local Display

| Function List for converter with local display | | | | | | |
|---|---|---|---|---|---|---|
| Model | Primary Power Supply | Dual Power Supply | Output | **Optional** Dual Output | Communication | Note |
| | Lithium Battery | 24V DC | 4-20mA (3-wire) | Pulse | RS485 **Protocol** | Output is only available when 24V Power supply is on. |
| | Lithium Battery | 24V DC | 4-20mA (2-wire) | Pulse | **Modbus** RS485 | |
| | Lithium Battery | 24V DC | 4-20mA (3-wire) | Pulse | **Modbus** RS485 | |

### 5.4.1 D1 with compensation (3-wire 4-20mA Output)

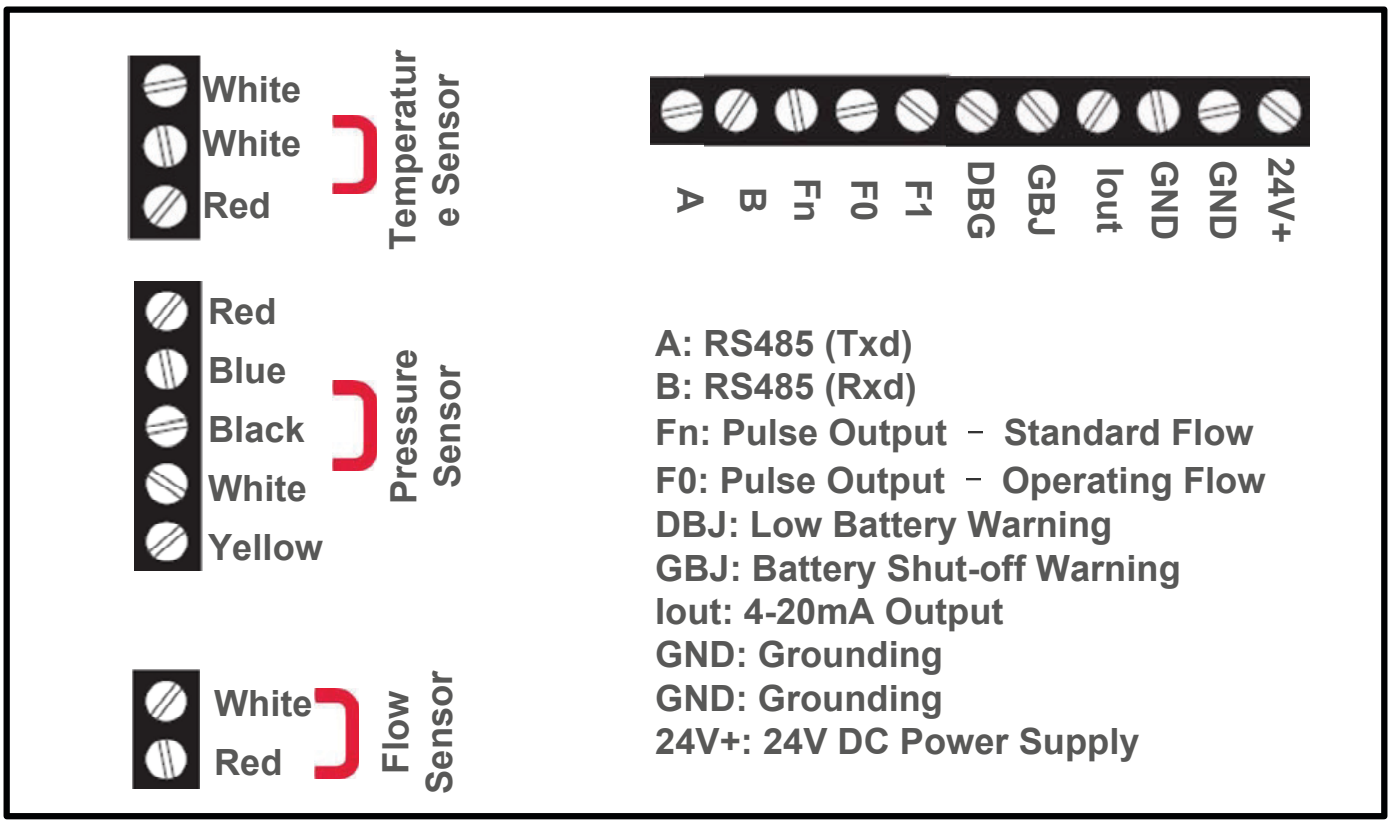


Electrical Wiring Diagram

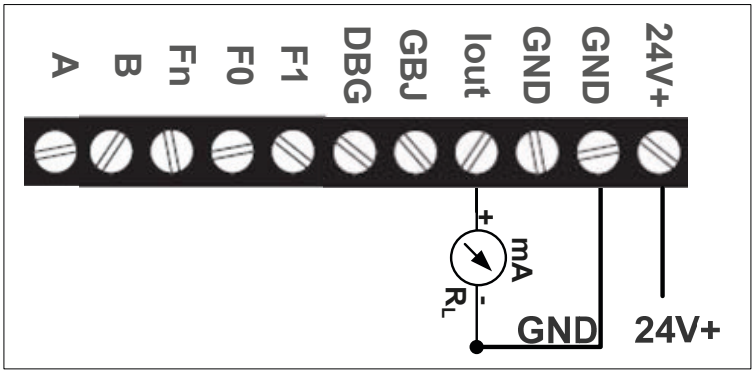


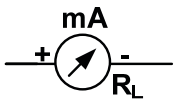


mA meter
0...20 mA or 4...20mA and other
$R_L$ is the internal resistance of the measuring point including the cable resistance


ООО «Флюид-Лайн» официальный дистрибьютор A-Flow
+7(495) 984 4101, +7(495) 517 7261, +7(495) 517 0261, E-mail: mail@fluid-line.ru, www.fluid-line.ru

5.4.2 D2 with compensation

Terminal Configuration

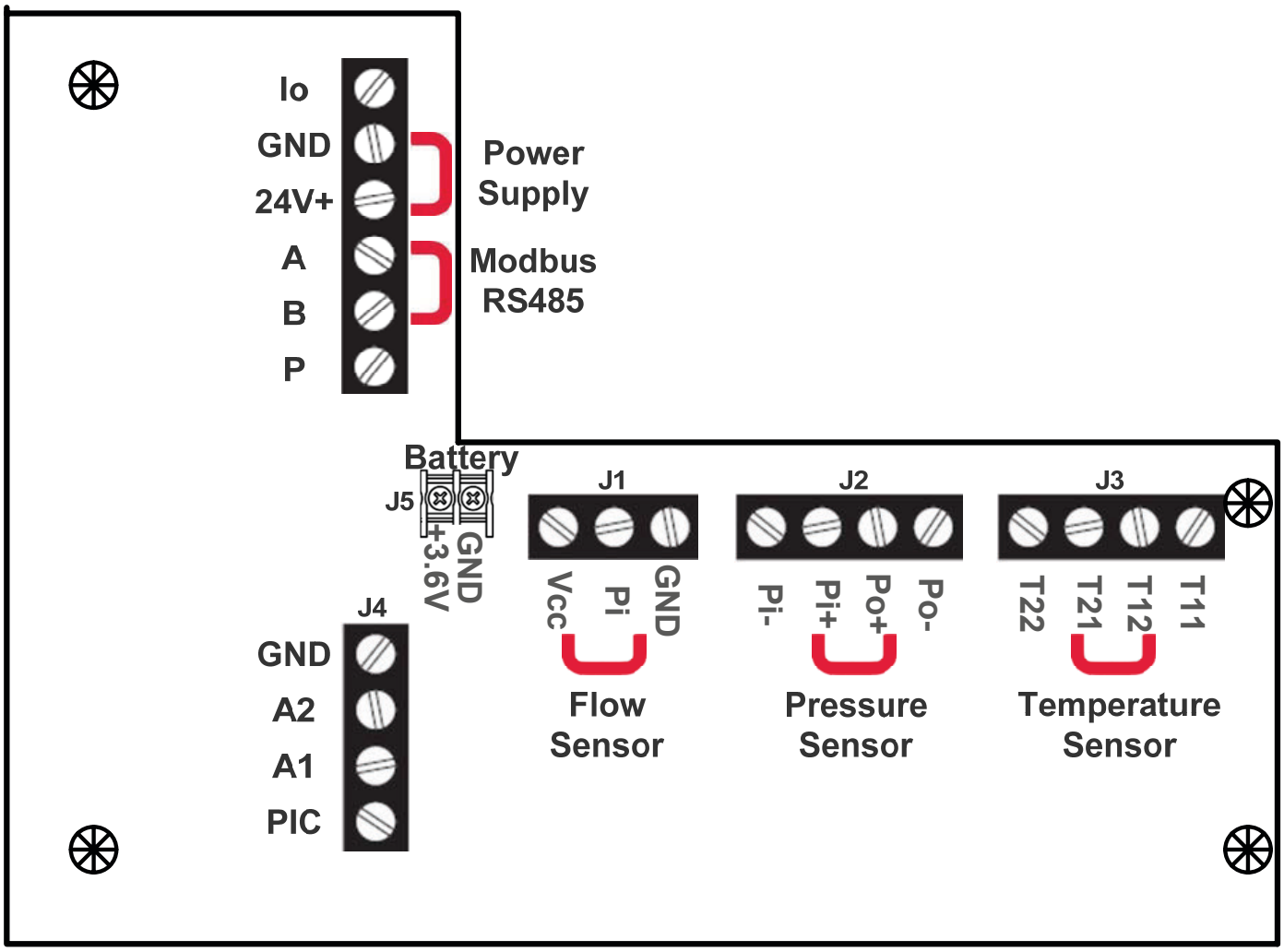


Electrical Wiring Diagram

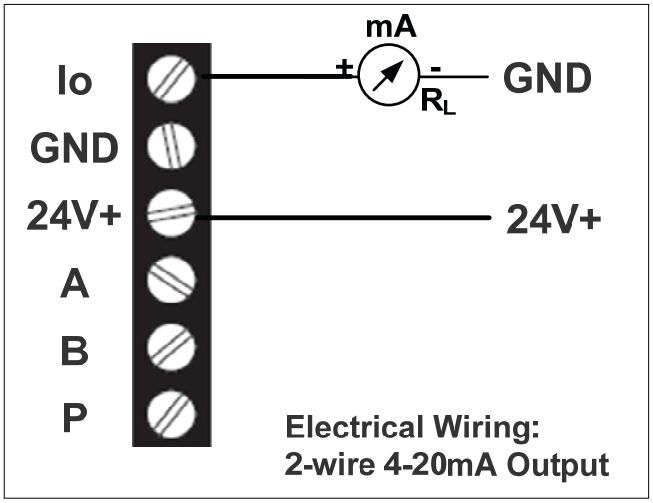


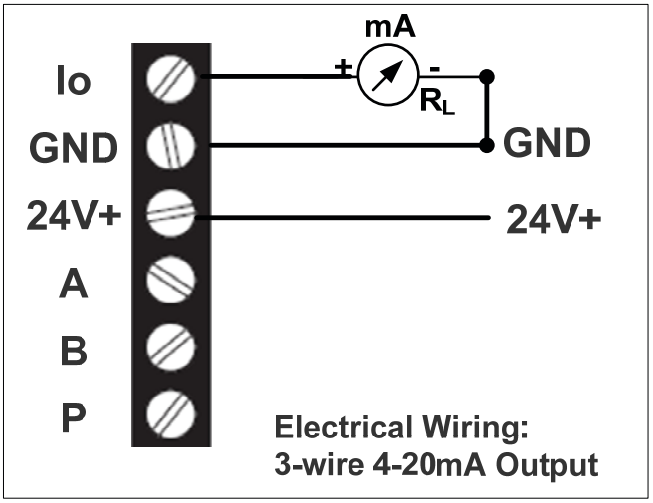


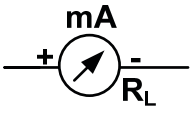


mA meter
0...20 mA or 4...20mA and other
$R_L$ is the internal resistance of the measuring point including the cable resistance

# 6. Programming and Setup

*: All flowmeters are tested and calibrated prior to leaving the factory, and the unique K-factor is provided on the calibration certificate. Keep the calibration certificate well to avoid the loss of K-factor.*

## 6.1 N; No display; Pulse Output

Customer should set the correct K-factor into PLC or Flow totalizer in order to get the correct flow rate.

## 6.2 A; No display; 4-20mA Output

*Only perform the Zero Point Calibration where it's necessary.*

6.2.1 Zero Point Calibration

(1) Shut off the value where the flowmeter is installed, ensure there is no flow rate in pipe.
(2) Put high accuracy amperometer into the circuit loop as series connection.
(3) Adjust the potentiometer W502 to make sure the display on amperometer is 4mA.

6.2.2 Full Scale Calibration: it's ONLY available for factory; return the flowmeter to factory for full scale calibration where is applicable.

## 6.3 Local Display

*Note: all menus are present in all signal converter versions, but some parameter settings are ONLY valid for specified models.*

### 6.3.1 Display and Keys

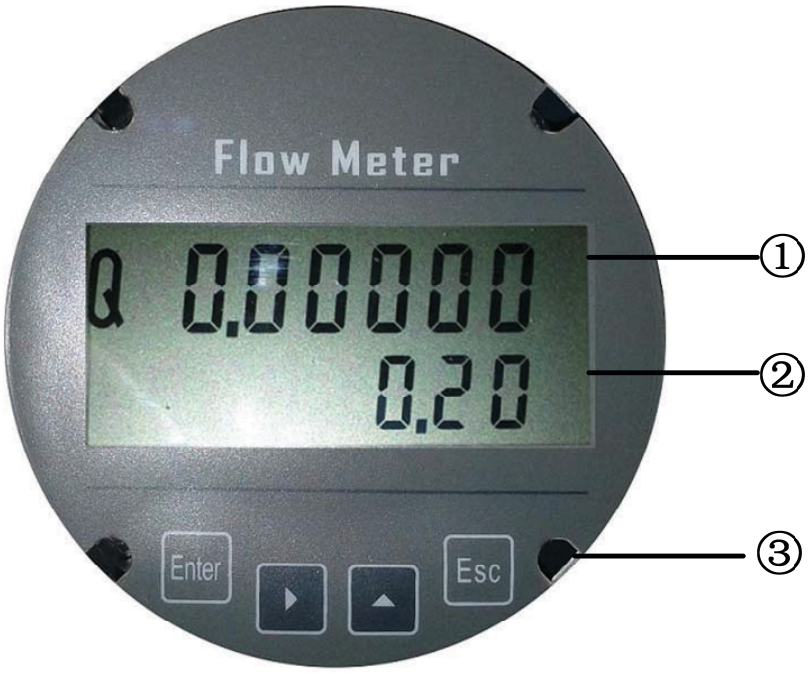


① Flow Rate

② Total Flow

③ Keys (See table below for function and representation in text)


ООО «Флюид-Лайн» официальный дистрибьютор A-Flow
+7(495) 984 4101, +7(495) 517 7261, +7(495) 517 0261, E-mail: mail@fluid-line.ru, www.fluid-line.ru
fluid-line

| Key | Measuring mode | Menu mode | Sub-menu or function mode | Parameter and data mode |
|---|---|---|---|---|
| **Enter** | 1. Display the frequency corresponding to flow rate<br>2. Enter the parameter setting mode | Select menu | Press 1 time, return to menu mode, data saved | Save the value and advance to next menu |
| | - | - | - | For numerical values, move cursor one position to the right or left |
| | - | - | Select sub-menu or function | Use cursor highlighted to change number, unit, setting |
| Esc | - | Return to measuring mode but prompt whether the data should be saved | Return to measuring mode but prompt whether the data should be saved | Return to measuring mode but prompt whether the data should be saved |
| ***Note***: Data are not saved when press "Esc" to return to measuring mode. If the value need to be changed, press "Enter" to save value first | | | | |

## 6.3.2 Parameters Set

Press "Enter" two times at measuring mode, it leads to Password Menu "- - - -".

(1) Input correct password and press "Enter" can start parameter setting.
(2) Press "Enter" again and no password is input can ONLY view all parameters

The total menus in "Parameters Set" are 16, and users can access and modify these menus depending on the input password grade. See table below for more information on password grade.

Table. Description of Password Grade

| Password Grade | Password | Login Privileges |
|---|---|---|
| Grade 1 | No Password Requirement | Read Only |
| Grade 2 | 1234 | Read and Edit |
| Grade 3 | 5678 | Save all data as factory defaults |
| Grade 4 | 1111 | Reload factory defaults |

*Note: parameter setting can be ONLY performed by authorized engineer, as parameter change can affect the accuracy of the flowmeter.*

Specific Menu – Parameters Set

| Menu | Parameter Name | Setting Method | Grades | Range |
|---|---|---|---|---|
| F---01 | Flow Rate Unit | Select Parameter | Factory ONLY | 1; 2; 3 |
| F---02 | Scaled Pulse Output In Liters | Select Parameter | User | 1: 1 Liter/Pulse<br>10: 10 Liter/Pulse<br>100: 100 Liter/Pulse |
| F---03 | Damping Time | Input Value | User | Unit: Second<br>Value: 1-10 |
| F---04 | Maximum Flow Rate | Input Value | User | Unit: same as Flow Rate |
| F---05 | Minimum Flow Rate | Input Value | User | Unit: same as Flow Rate |
| F---06 | Maximum Frequency Output | Input Value | User | 0-3000 Hz<br>Accuracy: 0.1Hz |
| F---07 | Baud Rate | Select Parameter | User | 1200; 2400; 4800; 9600; 19200<br>Data Format: n; 8; 1 |
| F---08 | Device Address | Input Value | User | 01-99 |
| F---09 | Frequency Output Mode | Select Parameter | User | 1; 2 |
| F---10 | Total Flow Reset | Input Value | User | Reset the new value and press “Enter” to confirm the change promptly. |
| P1 | Linearization of the Flowcurve: point 1 | Input Value | Factory ONLY | First Row: Frequency (P1)<br>Second Row: K-Factor (P1) |
| P2 | Linearization of the Flowcurve: point 2 | Input Value | Factory ONLY | First Row: Frequency (P2)<br>Second Row: K-Factor (P2) |
| P3 | Linearization of the Flowcurve: point 3 | Input Value | Factory ONLY | First Row: Frequency (P3)<br>Second Row: K-Factor (P3) |
| P4 | Linearization of the Flowcurve: point 4 | Input Value | Factory ONLY | First Row: Frequency (P4)<br>Second Row: K-Factor (P4) |
| P5 | Linearization of the Flowcurve: point 5 | Input Value | Factory ONLY | First Row: Frequency (P5)<br>Second Row: K-Factor (P5) |
| P | Average | Input Value | Factory ONLY | First Row: Frequency (P)<br>Second Row: K-Factor (P) |

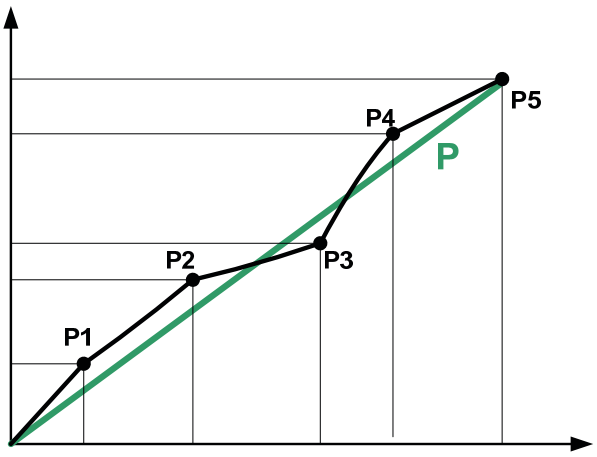


**Linearization**


ООО «Флюид-Лайн» официальный дистрибьютор A-Flow
+7(495) 984 4101, +7(495) 517 7261, +7(495) 517 0261, E-mail: mail@fluid-line.ru, www.fluid-line.ru

### 6.3.3 Parameter Function Table

| No. | Function | Settings / descriptions |
|---|---|---|
| F---01 | Flow Rate Unit | Selectable: 1, 2, 3<br>1: m3; 2: Liter; 3. Factory Reserved<br>Consult the factory first to change the unit, as the K-factor should also be changed. |
| F---02 | Scaled Pulse Output In Liters | Selectable: 1, 10, 100<br>1: 1 liter/Pulse; 10: 10 Liters/Pulse; 100: 100 Liters/Pulse<br>Only valid for model supporting Pulse Output; and Position 3 of DIP Switch is ON, others two are OFF. |
| F---03 | Damping Time | Value: 1-10 second; Recommended Value: 4 Second |
| Flow Range | | |
| F---04 | Maximum Flow Rate | Unit: same as Flow Rate |
| F---05 | Minimum Flow Rate | Unit: same as Flow Rate |
| Frequency Output | | |
| F---06 | Maximum Frequency Output | Value: 0-3000 Hz<br>Accuracy: 0.1Hz |
| RS485 Communication | | |
| F---07 | Baud Rate | Selectable: 1200; 2400; 4800; 9600; 19200 (Unit: Hz) |
| | | Default Data Format: 9600, n, 8, 1 |
| F---08 | Device Address | Value: 01-99 |
| | | |
| F---09 | Frequency Output Mode | Selectable: 1, 2 |
| | | 1: Original Pulse Output without linearization<br>2: Corrected Pulse Output after linearization |
| Reset Total Flow | | |
| F---10 | Total Flow Reset | Reset the new value and press “Enter” to confirm the change promptly. |
| Linearization | | |
| P1 | Linearization of the Flowcurve: point 1 | First Row: Frequency (P1)<br>Second Row: K-Factor (P1) |
| P2 | Linearization of the Flowcurve: point 2 | First Row: Frequency (P2)<br>Second Row: K-Factor (P2) |
| P3 | Linearization of the Flowcurve: point 3 | First Row: Frequency (P3)<br>Second Row: K-Factor (P3) |
| P4 | Linearization of the Flowcurve: point 4 | First Row: Frequency (P4)<br>Second Row: K-Factor (P4) |
| P5 | Linearization of the Flowcurve: point 5 | First Row: Frequency (P5)<br>Second Row: K-Factor (P5) |
| P | Average K-Factor | First Row: Frequency (P)<br>Second Row: K-Factor (P) |

## 6.4 D; Local Display

### 6.4.1 D1

(1) Display

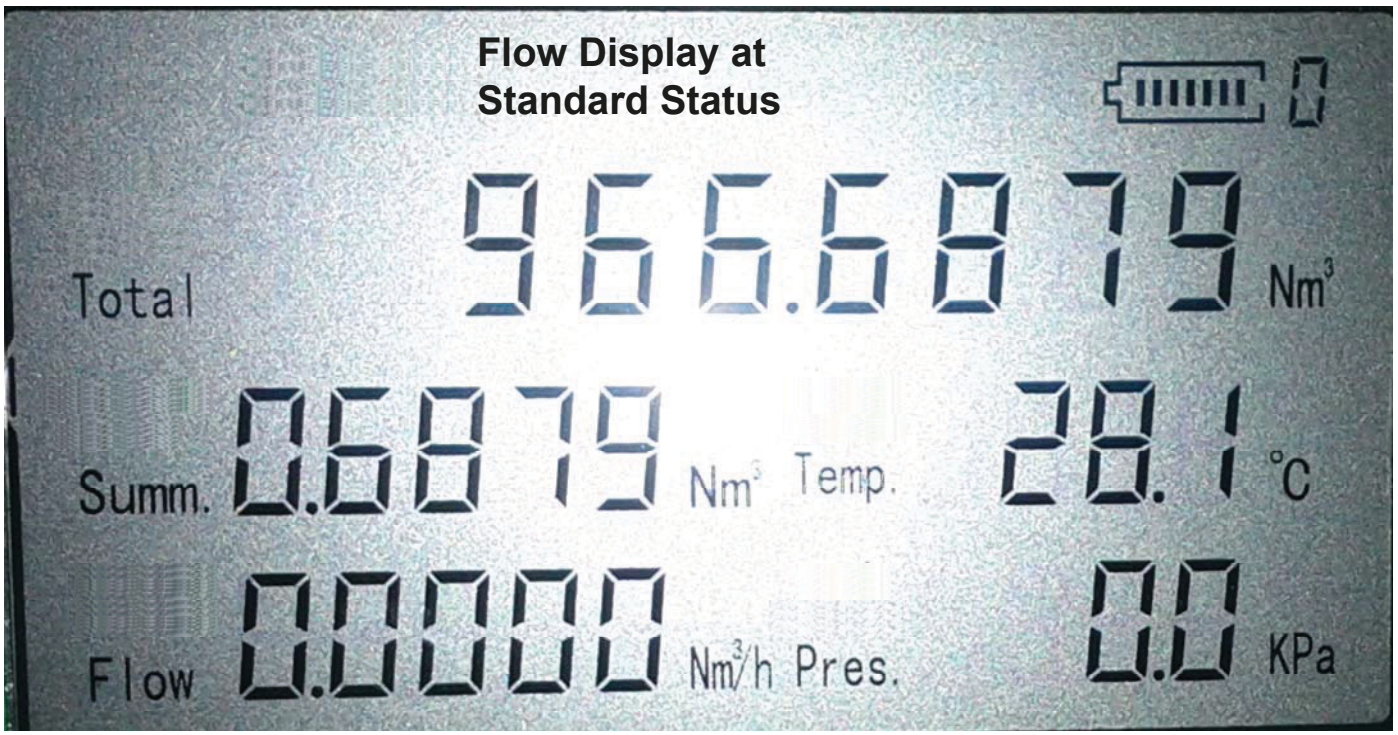


| **Representation** | |
|---|---|
| | Flow displayed based on Standard Status |
| Total | Total Flow; Unit: Nm3 |
| Summ. | Total Flow in one day; Unit: Nm3 |
| Flow | Flow rate; Unit: Nm3/h |
| Temp. | Temperature; Unit: Celsius Degree |
| Pres. | Pressure; Unit: KPa<br>Note: it's gauge pressure unless where there is particular declare. |


ООО «Флюид-Лайн» официальный дистрибьютор A-Flow
+7(495) 984 4101, +7(495) 517 7261, +7(495) 517 0261, E-mail: mail@fluid-line.ru, www.fluid-line.ru
fluid-line

(2) Parameters Illustration

| Parameter Number | Description | |
|---|---|---|
| 01 | The Max Flow Rate (Standard Status) corresponding to 20mA | |
| 02 | K1 (First K-Factor) | Linearization of the Flowcurve: point 1 |
| 03 | f1 (The frequency corresponding to K1) | |
| 04 | K2 (Second K-Factor) | Linearization of the Flowcurve: point 2 |
| 05 | f2 (The frequency corresponding to K2) | |
| 06 | K3 (Third K-Factor) | Linearization of the Flowcurve: point 3 |
| 07 | f3 (The frequency corresponding to K3) | |
| 08 | K4 (Fourth K-Factor) | Linearization of the Flowcurve: point 4 |
| 09 | f4 (The frequency corresponding to K4) | |
| 10 | K5 (Fifth K-Factor) | Linearization of the Flowcurve: point 5 |
| 11 | f5 (The frequency corresponding to K5) | |
| 12 | K6 (Sixth K-Factor) | |
| 13 | Pressure Upper Limit | |
| 14 | Local Atmospheric Pressure | |
| 15 | Device Address: RS485 | |
| 16 | Totalizer Reset (2: clear Totolizer without compensated; 3: clear totalizer which has been compensated; 9: Clear all | |
| 17 | Reserved Parameters | |

(3) Hand-held Operator

*Warning: Push "Set" Button to save your setting.*

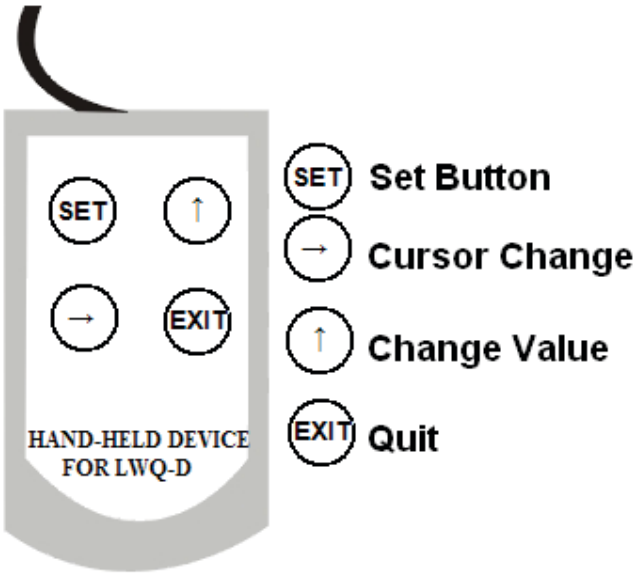

6.4.2 D2

(1) Display

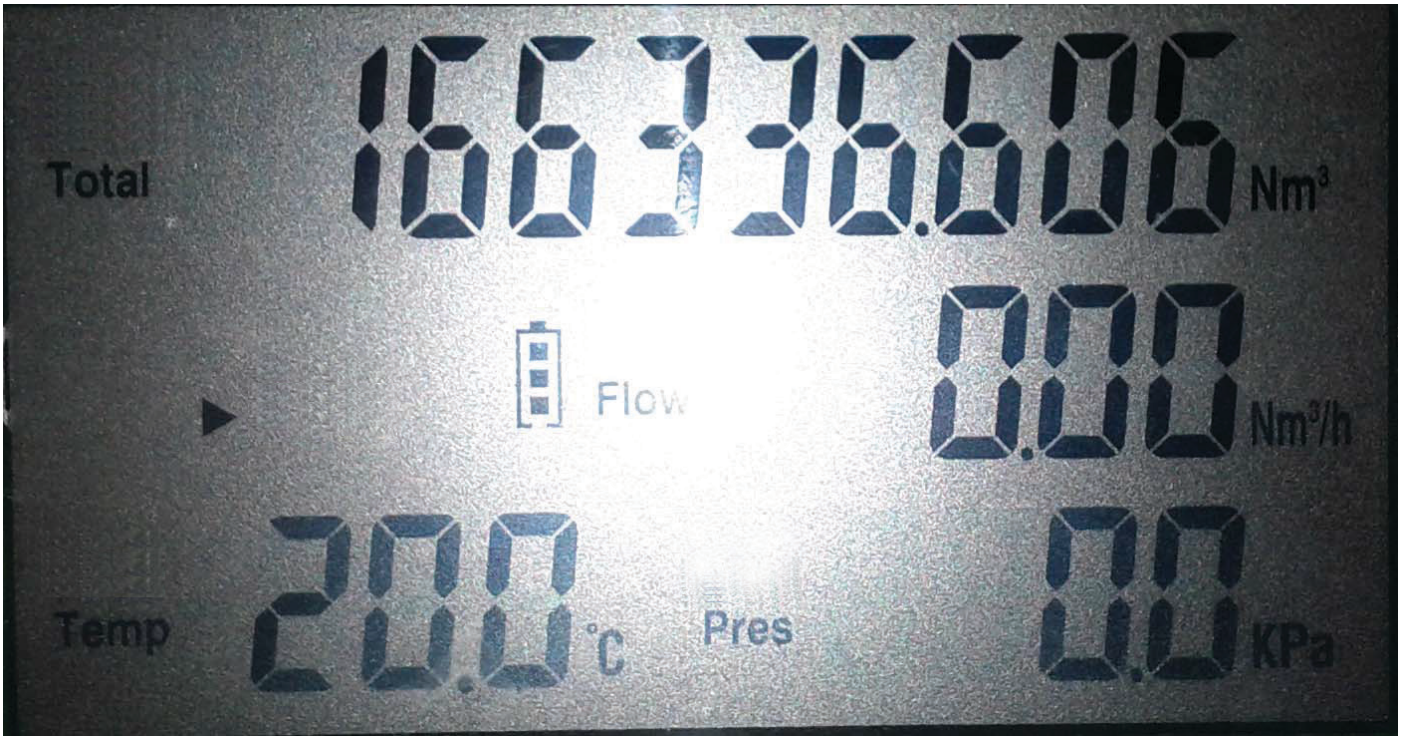


| **Representation** | |
|---|---|
| | Flow displayed based on Standard Status |
| Total | Total Flow; Unit: Nm3 |
| Summ. | Total Flow in one day; Unit: Nm3 |
| Flow | Flow rate; Unit: Nm3/h |
| Temp. | Temperature; Unit: Celsius Degree |
| Pres. | Pressure; Unit: KPa<br>Note: it's gauge pressure unless where there is particular declare. |


ООО «Флюид-Лайн» официальный дистрибьютор A-Flow
+7(495) 984 4101, +7(495) 517 7261, +7(495) 517 0261, E-mail: mail@fluid-line.ru, www.fluid-line.ru
fluid-line

(2) Parameters Illustration

| Parameter Number | Parameter Name | Description | |
|---|---|---|---|
| 000 | VTOT | Total flow based on operating status | |
| 001 | VM | Total flow based on standard status | |
| 002 | FS | Full Scale | |
| 003 | KM | Average K-factor | |
| 004 | F1 | F1 (The frequency corresponding to K1) | Linearization of the Flowcurve: point 1 |
| 005 | E1 | E1 (First K-Factor) | |
| 006 | F2 | F2 (The frequency corresponding to K1) | Linearization of the Flowcurve: point 2 |
| 007 | E2 | E2 (First K-Factor) | |
| 008 | F3 | F3(The frequency corresponding to K1) | Linearization of the Flowcurve: point 3 |
| 009 | E3 | E3 (First K-Factor) | |
| 010 | F4 | F4 (The frequency corresponding to K1) | Linearization of the Flowcurve: point 4 |
| 011 | E4 | E4 (First K-Factor) | |
| 012 | F5 | F5 (The frequency corresponding to K1) | Linearization of the Flowcurve: point 5 |
| 013 | E5 | E5 (First K-Factor) | |
| 014 | F6 | F6 (The frequency corresponding to K1) | Linearization of the Flowcurve: point 6 |
| 015 | E6 | E6 (First K-Factor) | |
| 016 | F7 | F7 (The frequency corresponding to K1) | Linearization of the Flowcurve: point 7 |
| 017 | E7 | E7 (First K-Factor) | |
| 018 | F8 | F8The frequency corresponding to K1) | Linearization of the Flowcurve: point 8 |
| 019 | E8 | E8 (First K-Factor) | |
| | | | |
| 100 | Tcnst | Temperature Constant | |
| 101 | Pcnst | Pressure Constant | |
| 102 | T0 | Zero Point Correction for temperature sensor | |
| 103 | Tk | Linearization for temperature sensor | |
| 104 | P0 | Zero Point Correction for pressure sensor | |
| 105 | Pk | Linearization for pressure sensor | |
| 106 | Pfs | Full Scale – Pressure Sensor | |
| 107 | Pair | Local Atmospheric Pressure | |
| 108 | Po | Isolated pulse output setting | |
| 109 | PIC | | |
| 110 | Zs | Value: 0/1<br>0: no correction on compressibility factor;<br>1: correction on compressibility factor | |

| Parameter Number | Parameter Name | Description |
|---|---|---|
| 111 | N2 | Molar Percentage – N2 |
| 112 | CO2 | Molar Percentage – CO2 |
| 113 | H2 | Molar Percentage – H2 |
| 114 | CO | Molar Percentage – CO |
| 115 | GR | Specific Gravity |
| 116 | DT | Date |
| 117 | TM | Time |
| 118 | CD | Password |
| | | |
| 200 | I4 | Zero Calibration for 4-20mA Output |
| 201 | I20 | Full Calibration for 4-20mA Output |
| 202 | BD | Baud Rate: RS485 |
| 203 | AR | Device Address: RS485 |
| 204 | Ps | Value: 0/1/2<br>0: Original Pulse<br>1: Scaled pulse output at operating status<br>2: Scaled pulse output at standard status |

# 7. Troubleshooting

| Symptom | Probable Cause | Solution |
|---|---|---|
| More Volume/Output than displayed or registered | 1. Rotor may drag due to foreign matter obstruction. | Check for debris inside the meter. Clean and reassemble. |
| | 2. Magnetic pickup not screwed down all the way into the turbine flowmeter body. This causes it not to detect all the rotor blades as they pass | Screw the magnetic pickup all the way down into the turbine flow-meter body. Hand-tighten only. |
| | 3. K-factor is too high in electronic/readout device | Verify K-factor used. K-factor should be decreased. |
| Less Volume/Output than displayed or registered | K-factor is too low in electronic/readout device | Verify K-factor used. K-factor should be increased. |
| Flow rate indication is unstable | 1. Gas flow rate is not stable | Keep the valve position and make sure the gas in pipe is stable |
| | 2. Battery Power Type: Bad contact on the connector between battery and PCB | Open back cover and repower the flow meter |
| | 3. DC Power Type: supply voltage is abnormal | Check and ensure power supply is 24V DC |