Formed Sampling Cylinders and Accessories

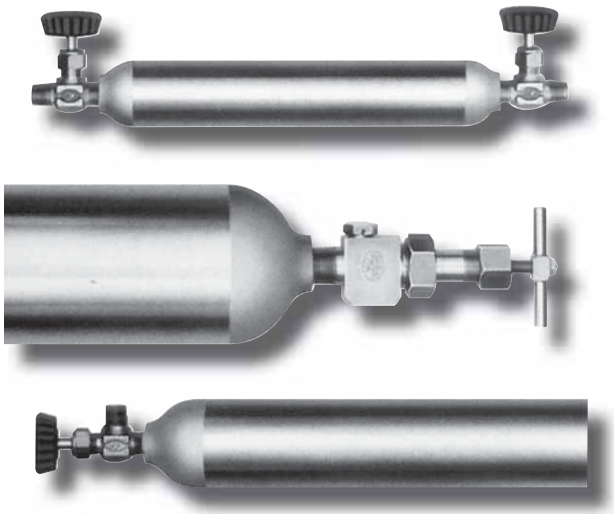

sampling cylinders

Formed Sampling Cylinders & Accessories

Fluidline Sampling Cylinders are designed and manufactured to stringent U.S. Department of Transportation (DOT) specifications to provide long performance life and maximum safety to the user.

These cylinders are fabricated from seamless tubing or pipe with increased wall thickness in the threaded area, which prevents expansion when valves are installed. Completely formed ends maximize strength and eliminate potential leak paths. Internal sandblasting removes surface imperfections and removes foreign particles.

Single- and double-ended cylinders are available as standard in a variety of capacities from 10 milliliters to 4 gallons.

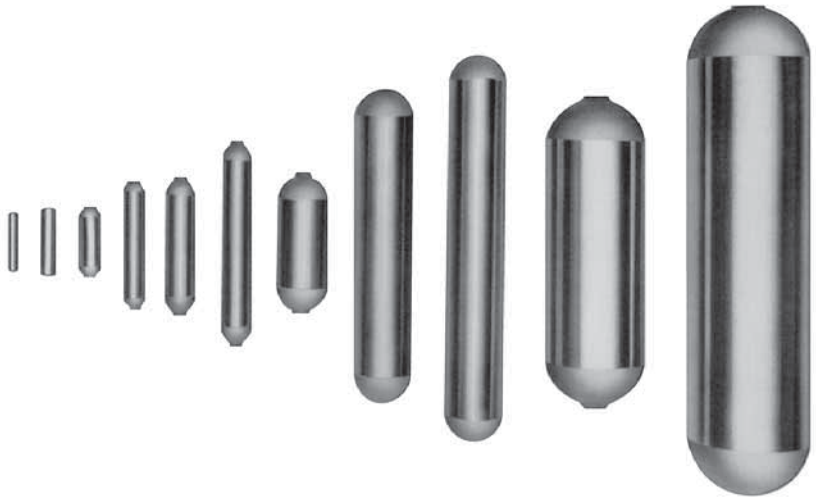

Typical Applications

- Sampling hydrocarbons in refineries and petrochemical plants
- Grab sampling for chromatographic analysis
- Snubbers in reactor feed lines
- Surge accumulators in High Pressure Gas Systems
- High Vacuum Systems as experimental chambers and molecular sieves
- Chemical reaction vessels

Features & Benefits

- Choice of 12 different capacities from 10 mL through 4 gallons.
- Cylinder ends come in ⅛″, ¼″, ⅜″ and ½″ NPT female connections (depends on capacity).
- Standard cylinders are formed from seamless drawn 304 SS, 316 SS or Monel® pipe or tubing.
- Precision spinning operation eliminates internal pockets and provides easy flow of the sample.
- All models are internally sandblasted to remove surface imperfections and eliminate foreign particles.
- Single- and double-ended cylinders in most capacities are available as standard.
- Rugged wall thickness – extra strength around threads.
- Cylinders may be ordered with valves, relief devices, dip tubes, carrying handles, collar and flanges and end caps.
- The interior of Hoke cylinders are available with a special FEP lining which provides excellent lubricity and very low permeability. To order, add "TL" following the cylinder part number. Restek®, Silcosteel®, and Sulfinert® surface treatments available for many sizes. Consult factory.
- Special High Tolerance NPT Thread

Formed Sampling Cylinders

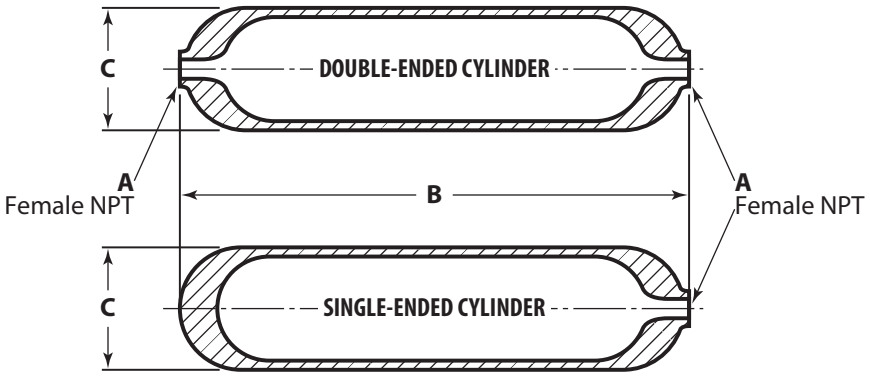

Formed Cylinders: 316 Stainless Steel only
Pressure ratings up to 5000 psig can be supplied as a special. Consult the factory for quotation of any cylinder rated above 1800 psig.

When testing to ASME specifications is required, contact Hoke for quotation and specify maximum pressure and temperature

To learn more about DOT-rated Cylinders, please read Hoke *Spun Sampling Cylinders* catalog, Part #79006.

Other Materials
Cylinders manufactured from other materials are available. Contact Fluidline for quotation.

Teflon®-lined Cylinders
The interior of Fluidline cylinders are available with a special FEP lining which provides excellent lubricity and very low permeability. To order add "Teflon®-lined" following the cylinder part number.

How to Order
To order a Fluidline Sampling Cylinder, specify the model number based on capacity required, single- or double-end connections and end connection size.

Dimensions & How to Order

PRESSURE RATING psig [bar]	INTERNAL VOLUME	A inch	ORDERING NUMBERS		DIMENSIONS inch [mm]		WEIGHT lb (kg)
			SINGLE ENDED	DOUBLE ENDED	LENGTH B	OUTSIDE DIAMETER C	
304 Stainless Steel, 400 psig [28 bar]							
400 [28]	1000 mL	½	*	8LD1000	10.5 [627]	3.5 [89]	4.5 [2.0]
	2250 mL	½	*	8LD2250	15.25 [387]	4.0 [102]	7.0 [3.0]
	3000 mL	½	*	8LD3000	19.5 [489]	4.0 [104]	8.4 [3.8]
	1 gal.	½	*	8LD1G	23.75 [603]	4.0 [104]	10.25 [4.6]
304 Stainless Steel, 1800 psig [124 bar]							
1800 [124]	75 mL	¼	4HS75	4HD75	5 [127]	1.5 [38]	0.75 [0.33]
	75 mL	⅜	6HS75	6HD75	5 [127]	1.5 [38]	0.75 [0.33]
	150 mL	¼	4HS150	4HD150	9 [229]	1.5 [38]	1.38 [0.61]
	150 mL	⅜	6HS150	6HD150	9 [229]	1.5 [38]	1.38 [0.61]
	300 mL	¼	4HS300	4HD300	9.75 [248]	2.0 [51]	2.0 [0.9]
	300 mL	⅜	6HS300	6HD300	9.75 [248]	2.0 [51]	2.0 [0.9]
	500 mL	¼	4HS500	4HD500	14.5 [368]	2.0 [51]	3.0 [1.4]
	500 mL	⅜	6HS500	6HD500	14.5 [368]	2.0 [51]	3.0 [1.4]
	1000 mL	½	8HS1000	8HD1000	11.0 [279]	3.5 [89]	7.25 [3.3]
	2250 mL	½	8HS2250	8HD2250	17 [432]	4.0 [102]	13.4 [6.0]
	3000 mL	½	8HS3000	8HD3000	22 [559]	4.0 [102]	16.75 [7.6]
	1 gal.	½	8HS1G	8HD1G	26.75 [679]	4.0 [102]	20.6 [9.3]
	2.5 gal.	½	—	8HD2½G	24.5 [622]	6.625 [168]	42.5 [19.9]
	4 gal.	½	—	8HD4G	36 [914]	6.625 [168]	61.5 [28]
316 Stainless Steel, 1800 psig [124 bar]							
1800 [124]	10 mL	⅛	2HSY10	2HDY10	4 [102]	0.625 [16]	0.125 [0.06]
	30 mL	¼	4HSY30	4HDY30	4.75 [121]	1.0 [25]	0.44 [0.20]
	75 mL	¼	—	4HDY75	4.75 [121]	1.5 [38]	0.75 [0.34]
	150 mL	¼	—	4HDY150	9 [229]	1.5 [38]	1.4 [0.6]
	300 mL	¼	—	4HDY300	9.5 [241]	2.0 [51]	2.0 [0.9]
	500 mL	¼	—	4HDY500	14.5 [368]	2.0 [51]	2.9 [1.3]
Monel®**							
5000 [345]	95 mL	¼	4HSM95	4HDM95	5.25 [133]	1 21/32 [42]	1.5 [0.7]
	150 mL	¼	4HSM150	4HDM150	6.5 [165]	1 29/32 [48]	2.4 [1.0]
	300 mL	¼	4HSM300	4HDM300	11.75 [298]	1 29/32 [48]	4.0 [1.8]
	500 mL	¼	4HSM500	4HDM500	19.5 [495]	1 29/32 [48]	6.13 [2.8]
3500 [241]	1000 mL	¼	4HSM1000	4HDM1000	11.5 [292]	3.5 [89]	11.4 [5.0]

* *For single-ended applications, order double-ended cylinder with plug part number 502B.*
** *Standard models are non-DOT rated*

Cylinders Accessories & Valves

Collars, Flanges, Caps, Carrying Handles

To enable the user to safely transport pressurized samples, Fluidline offers a variety of collar and flange assemblies, protective end caps and carrying handles. Collars can only be assembled at the Hoke factory.

Other accessories can come completely assembled to a cylinder or may be ordered for field installation.

To order, specify the cylinder part number followed by the part number of the accessory.

Carrying Handles, Valve Protection End Caps

ORDER BY CATALOG PART NUMBER			CYLINDER NUMBER		DIMENSIONS	
COLLAR & FLANGE ASSY. #	END CAP PART #	CARRYING HANDLE KIT PART #	HIGH PRESSURE	LOW PRESSURE	A OUTSIDE DIAMETER	B
81744–1	3107	80228–1	4HD300 6HD300 4HD500	4HD300 6HD300 4HD500	2 in 51 mm	6⅝ in 168 mm
81744–1	3107	80228–1	6HD500	6HD500	2 in 51mm	6⅝ in 168 mm
80226–1	3107	80229–1	8HD1000	8HD1000	3½ in 89mm	6⅝ in 168 mm
80227–1	3107	80230–1	8HD2250	8HD2250	4 in 102mm	6⅝ in 168 mm
80227–1	3107	80230–1	8HD3000	8HD3000	4 in 102 mm	6⅝ in 168 mm
80227–1	3107	80230–1	8HD1G	8HD1G	4 in 102 mm	6⅝ in 168 mm
81533–1	3107	80350–1	8HD2½GF	—	6⅝ in 168 mm	6⅝ in 168 mm
81533–1	3107	80350–1	8HD4GF	—	8 in 203 mm	6⅝ in 168 mm
1756	3107	80228–1	4HDM150	—	1²⁹⁄₃₂ in 48 mm	6⅝ in 168 mm
1756	3107	80228–1	4HDM300	—	1²⁹⁄₃₂ in 48 mm	6⅝ in 168 mm
1756	3107	80228–1	4HDM500	—	1²⁹⁄₃₂ in 48 mm	6⅝ in 168 mm

All angle pattern valves shown in this catalog can be used with protective end caps. The globe pattern valves 3752M4Y2 shown on page 10 are the only globe pattern valves which can be used with protective end caps.

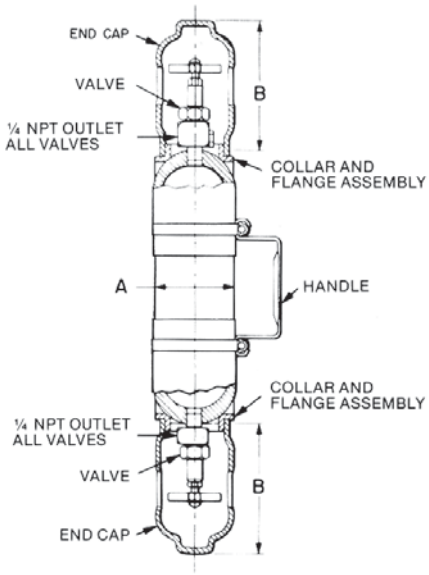

Dip Tubes

Dip tubes provide a vapor space of the specified volume in cylinders containing liquefied gases, allowing the liquid to expand as the temperature increases. Without adequate vapor space, a small temperature increase can cause the liquid to expand, increasing the pressure dramatically.

Refer to local regulations and other appropriate guidelines for safe cylinder filling limits for your application.

Dip tubes may be ordered in outages of 10, 20 and 30% to provide a respective filled capacity of 90, 80 or 70%. A 30% outage tube would "dip" into a cylinder to a point equivalent to the liquid level of a cylinder filled to 70% of its capacity. Dip tubes in other outages can also be ordered, contact the factory.

To ensure leak-tight performance, dip tubes must be properly welded to a fitting, valve, or relief device.

When ordering dip tubes on valves without cylinders, the cylinder model number or capacity must be identified.

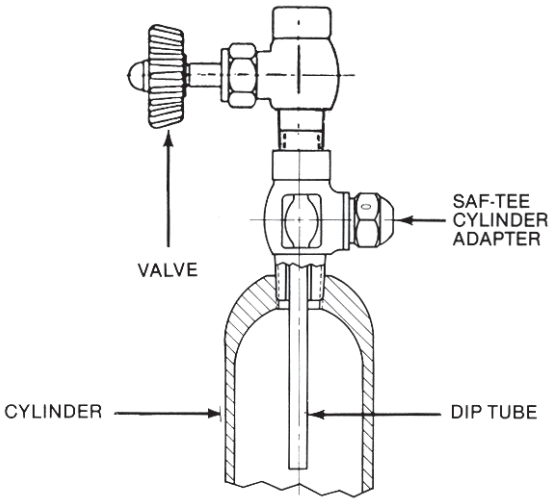

Typical Dip Tube Installation